Simple is the BEST!

Taking advantage of the abundant experiences, Taihei Boeki Co., Ltd. that specializes in manufacturing of pressure switches has successfully developed the most easy-to-use semiconductor pressure switches with its original technology.

New Digital Type Semiconductor Pressure Switches - PZD Series -

In result of persistent efforts of research and development to satisfy all necessary requirements for pressure switches, the new digital type semiconductor pressure switches that fit the 21st century have attained completion by utilizing the cutting edge digital technology.

Features

- Simplified setting method (Anyone can easily set the pressure switches.)
- Real time pressure indication (The actual pressure is always displayed.)
- Easy to operate (Anyone can easily operate the pressure switches.)
- High visibility (Pressure values can easily be seen even from distant and dark place.)
- Actual pressures setting method (You can set the pressure switches without conscious of notion of a differential pressure.)
- Wide setting range (A differential pressure can be adjusted to a large extent.)
- Relay contact output (You can hook up terminals of the pressure switches in a similar way of wiring mechanical pressure switches.)
- Wiring with a connector (One output type pressure switches have adopted a connector wiring method.)
- Two outputs (A two outputs type can be selected.)
- Two types of the pressure setting method (Either an external setting method or an internal setting method can be selected.)
- Two types of the housing (A pressure port location can be selected from the two types, bottom and back.)

New Analog Type Semiconductor Pressure Switches - PZA Series -

The PZA series are renewal analog type semiconductor switches that inherit the greatest benefit of their predecessors, the PZ series, which was proven from assured actual characteristics of compact and high performance. The PZA series have realized much high accuracy, simplicity and lower cost.

Features

- Simplicity (You can hook up terminals of the pressure switches in a similar way of wiring mechanical pressure switches.)
- A relay output type has been added (In addition to the conventional transistor output type, the relay output type has come into the family.)
- High cost performance

The common features of the PZD series and the PZA series

- Reasonably compact size (The figure of these series are not so large nor so small. It is the most appropriate size to be handled.)
- High accuracy (The series are highly accurate pressure switches.)
- High proof pressure (The pressure switches are featured with extremely high proof pressure.)
- Clog-free pressure port (The pressure switches have adopted no orifice configuration, which assures clog-free operation.)
- High cost performance (The pressure switches boast very high cost performance.)
- Non-leak (The pressure port is a sealed configuration utilizing SUS630.)

PZD Series —Digital Type Semiconductor Pressure Switches—

PZD□□L

PZD□□B

PZD100B

■Specifications

MPa
(kgf/cm²)

Type	Range	Minimum Differential	Maximum Differential	Rated Pressure	Proof Pressure	Indication Step Digit	Indication Accuracy	Form of Pressure Indication ＊1
PZD 01	0～999kPa (0～9.99)	20kPa (0.2)	Within the Range	1 (10)	3 (30)	4～5kPa	±0.02	M 888 ＊2
PZD 02	0～2 (0～20)	0.03 (0.3)		2 (20)	3 (30)	0.01	±0.02	M 8.88 ＊3
PZD 05	0～5 (0～50)	0.06 (0.6)		5 (50)	15 (150)	0.03	±0.07	
PZD 10	0～9.99 (0～99.9)	0.2 (2)		10 (100)	30 (300)	0.04～0.05	±0.15	
PZD 20	0～20 (0～200)	0.3 (3)		20 (200)	75 (750)	0.1	±0.25	M 88.8 ＊4
PZD 30	0～30 (0～300)	0.4 (4)		30 (300)	75 (750)	0.2～0.3	±0.25	
PZD 50	0～50 (0～500)	0.6 (6)		50 (500)	75 (750)	0.2～0.3	±0.25	
PZD 100	0～99.9 (0～999)	2.0 (20)		100 (1000)	150 (1500)	0.4～0.5	±1.50	

＊1 M：Mode Indication 8：Pressure Indication .：Decimal Point
＊2 Indication of 3 digits integer number in the unit of kPa ＊3 Indication of 2 digits after the decimal point
＊4 Indication of 1 digit after the decimal point Consult with the manufacturer for other special specifications.

Note

- When ordering, specify your requirement of a contact configuration ("a" contact or "b" contact). You can not change the contact configuration after delivery of the pressure switch.
- Select a pressure switch that has higher proof pressure as much as possible, because surge pressures that become several times greater than nominal pressure may occur in a certain hydraulic circuit. If you can not eliminate surge pressure in your system, insert a damper in the hydraulic pressure circuit.
- Do not attempt to push directly the sensing part of the pressure switch by inserting a screw driver or any other tool.
- When you use coolant liquid as pressure media, you should use a filter in your hydraulic system to prevent foreign matters from getting into a pressure port of your pressure switch.
- When overpressure exceeding the rated pressure is applied, the error indication of (EEE) is shown on your pressure switch.
- When vacuum pressure is applied, the indication of (c) shown on your pressure switch.
- Indication of the last digit may fluctuate, however, the fluctuation does not mean malfunction of your pressure switch.

■Model Selection Guide

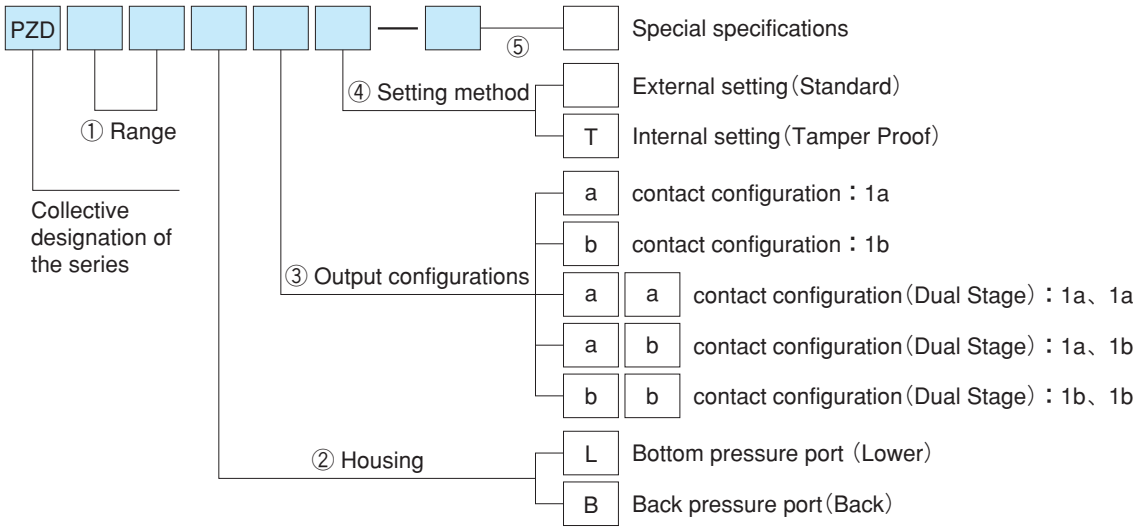

※Only the housing B is available for PZD100.

How to order

① Select pressure range of a pressure switch you will use. (The digits in a model number denote the pressure range.)

② Select a housing (L= bottom pressure port and B=back pressure port, from the view of indication panel)

③ Select an output configuration (Select "a" or "b" for the one contact configuration, and "aa", "ab" or "bb" for the two contacts configuration.)

④ Select pressure setting method

☐ **External setting method (standard) : No code**
Setting buttons are provided on the front panel, which facilitates pressure setting from exteternal of the switch body.

☐ **Internal setting method : Code T**
Remove the front panel, then set pressure with internal setting buttons. In this way, erroneous operation can be avoided after the pressure is installed.

Optional connector cables

Name	Part number	Cable length	Description
Connector cable※	WAK4-2 ／S90	2 m	M12 4P connector
	WAK4-5 ／S90	5 m	
	WAK4-10／S90	10 m	
	WAK8-2 ／S90	2 m	M12 8P connector
	WAK8-5 ／S90	5 m	
	WAK8-10／S90	10 m	

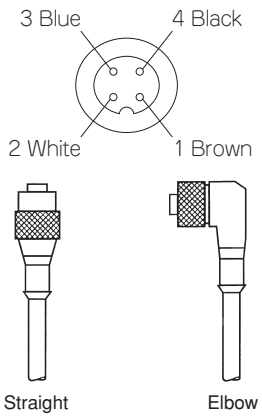

- This part number is straight type. Elbow type changes from "WAK" to "WWAK".
- Use a conversion adaptor (an available accessory) for the pressure port when you replace a pressure switch from an obsolete type PZ to a new type PZ. (Refer to optional accessory in page 5.)

＊ Connector cable is made by TURCK.

Common specifications

Supply voltage : 24VDC (9VDC to 28VDC)
Consumption current : Below 100mA
Output method : Relay output (120mA AC or DC 200V peak MOSFET relay)
Contact configuration

Configuration		Symbol	Connection
1 contact	1a（N.O.）	a	M12 4P connector
	1b（N.C.）	b	
2 contacts（Dual Stage）	1a（N.O.）, 1a（N.O.）	aa	M12 8P connector
	1a（N.O.）, 1b（N.C.）	ab	
	1b（N.C.）, 1b（N.C.）	bb	

Power indication : Yellow LED
Pressure indication : 3 digits Red LED
Output indication : Red and Green LED
Operation method : Indication of digits by switching the mode
Repeatability : ±0.5% of F.S.
Offset drift : ±1% of F.S.
Drift : ±2% of F.S.
Temperature characteristics : ±0.1%／℃
Operating temperature range : −20 to +80℃, non-condensation and non-freezing
Permissible temperature at the wet part : −40 to +125℃

Durability : More than 10,000,000 cycles
Response time : Below 1 msec.
Material of the wet part : SUS630
Material of the housing : Die-cast Aluminum (alumite treatment)
Enclosure type : IP65
Pressure port connection : Rc1/4 (PT1/4)
: G1/2 (PF1/2) (male thread)−PZD100 only
Conduit connection : 1 contact M12 4P connector
: 2 contacts M12 8P connector
Pressure media : Water, compressed air, gases, general hydraulic oil
Mass : 240g

■Dimensional drawing

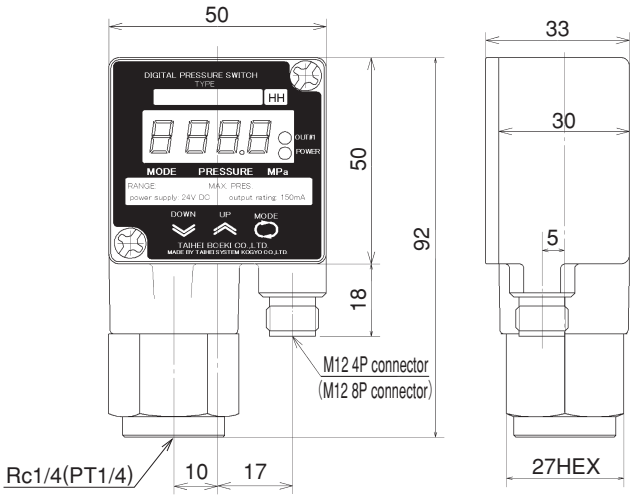

PZD□□La、b

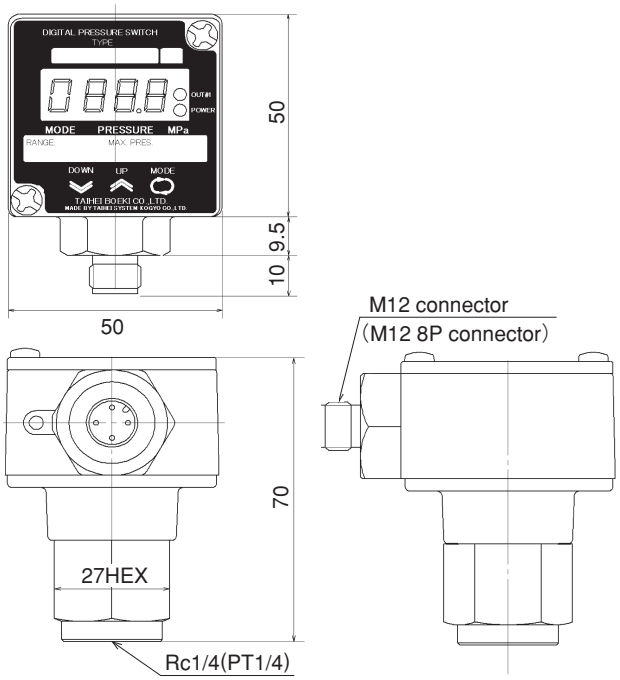

PZD□□Ba、b
(Except PZD100)

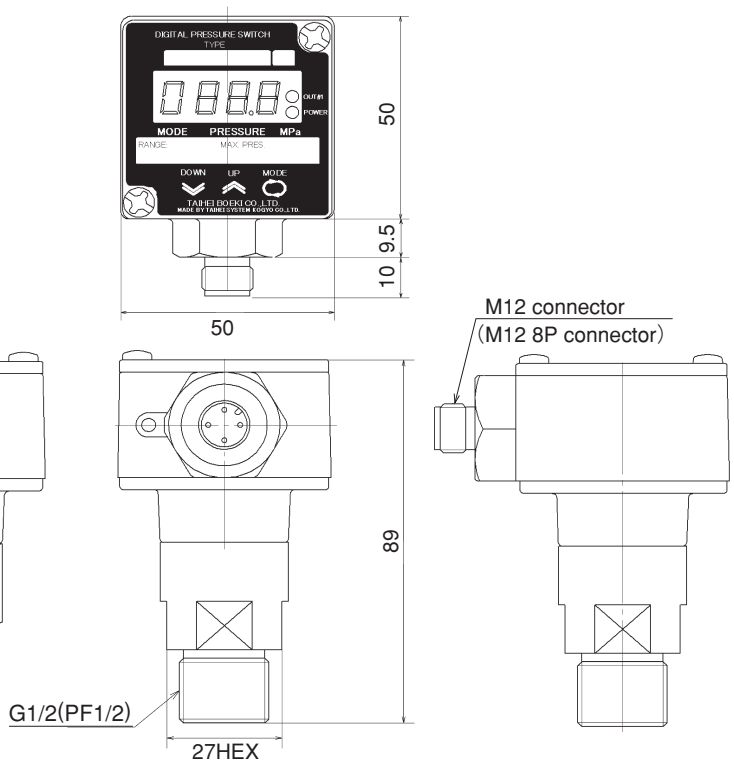

PZD100Ba、b、PZD100Baa、ab、bb

PZA Series —Analog Semiconductor Type Pressure Switches—

PZA□□T

PZA100T

PZA□□R
Relay output type

PZA□□T
Transistor output type

Specifications

MPa
(kgf/cm²)

Type	Range	Adjustable Differential Range: Minimum Differential: Low Range	Middle Range	High Range	Maximum Differential	Rated Pressure	Proof Pressure	Analog output (V) (rough indication)	Output method
PZA 01	0～1 (0～10)	0.01 (0.1)	0.02 (0.2)	0.03 (0.3)	20% of F.S.	1 (10)	3 (30)	1～3	○ Switching output R : Relay output (“a” contact) T : Transistor output (NPN) ○ Analog output (rough indication) Output terminals : ＋S, －V
PZA 02	0～2 (0～20)	0.01 (0.1)	0.03 (0.3)	0.06 (0.6)		2 (20)	3 (30)	1～3	
PZA 05	0～5 (0～50)	0.02 (0.2)	0.08 (0.8)	0.12 (1.2)		5 (50)	15 (150)	1～3	
PZA 10	0～10 (0～100)	0.08 (0.8)	0.12 (1.2)	0.25 (2.5)		10 (100)	30 (300)	1～3	
PZA 20	0～20 (0～200)	0.1 (1)	0.3 (3)	0.5 (5)		20 (200)	75 (750)	1～3	
PZA 30	0～30 (0～300)	0.2 (2)	0.5 (5)	0.8 (8)		30 (300)	75 (750)	1～3	
PZA 50	0～50 (0～500)	0.2 (2)	0.5 (5)	0.8 (8)		50 (500)	75 (750)	1～3	
PZA 100	0～100 (0～1000)	0.5 (5)	1.0 (10)	1.5 (15)		100 (1000)	150 (1500)	1～3	

Consult with the manufacturer for other special specifications.

Indication of type

Collective designation of the series — Range

PZA □ □ □ — □ □ Special specifications

Output method: R Relay output (“a”contact) / T Transistor output (NPN)

Optional accessories

Name	Type	Description	Material	“A” Dimension
Conversion adaptor	MMA01	Male to male, Steel	S25C	17
Conversion adaptor	MMA02	Male to male, Stainless steel	SUS304	14

Use the conversion adaptor for the pressure port when you replace a pressure switch from an obsolete type PZ to a new type PZ.

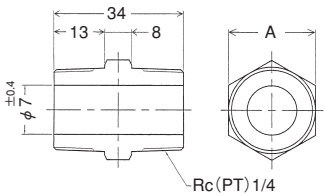

Common specifications

Supply voltage : 24VDC (9VDC to 28VDC)
Consumption current : Below 30mA
Output method : R Relay out put
120mA AC or DC
200V peak MOSFET relay
: T Transistor output (NPN)
28VDC, 80mA max
Terminal connection : 5P terminal (M3 terminal screws)
Output indication : Red LED
Analog output : 1VDC～3VDC or 1VDC～5VDC (rough indication)
Operation method : Rotation of the setting trimmers
Repeatability : ±0.5% of F.S.
Drift : ±2% of F.S.
Temperature characteristic : ±0.1%／℃
Operating temperature range : －20 to ＋80℃, non-condensation and non-freezing

Permissible temperature at the wet part : －40 to ＋125℃
Durability : More than 10,000,000 cycles
Response time : Below 1 msec.
Material of the wet part : SUS630
Material of the housing : Die-cast Aluminum (alumite treatment)
Enclosure type : IP65
Pressure port connection
: Rc1/4 (PT1/4)
: G1/2 (PF1/2) (male thread)—PZA100 only
Conduit connection : G1/2(PF1/2)
Pressure media : Water, compressed air, gases, general hydraulic oil
Mass : 230g

■Dimensional drawing

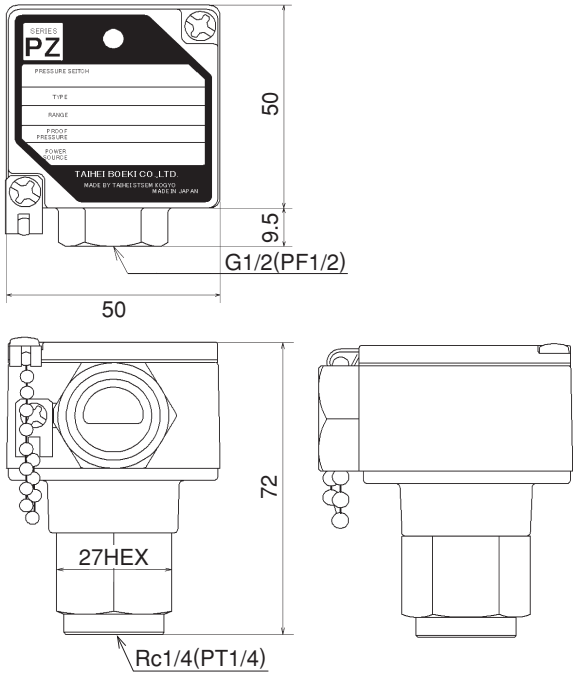

PZA□□
(Except PZA100)

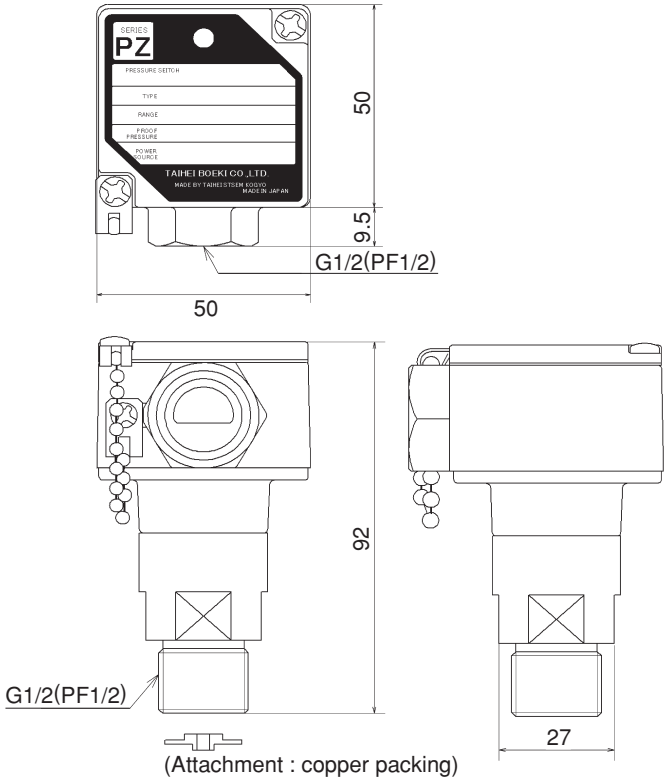

PZA100T or R

■Inner drawing

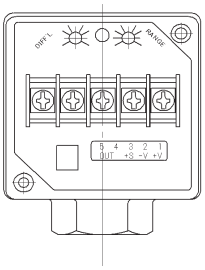

R : Relay output

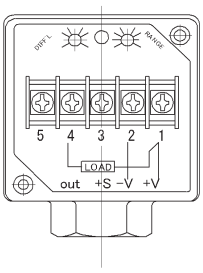

T : Transistor output

■Examples of input/output circuit [When the "T" (Transistor output) is selected.]

(1) Relay wiring diagram

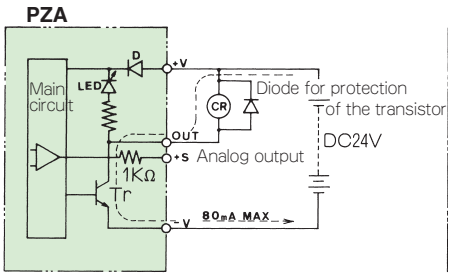

(2) Photo-coupler wiring diagram

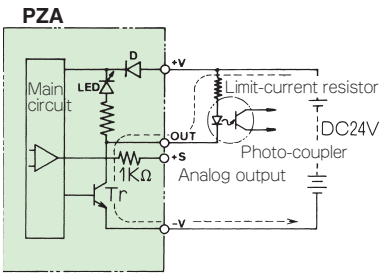

(3) ON-OFF voltage output diagram

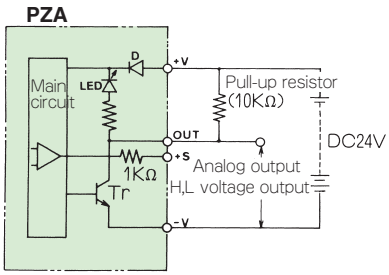

D : A diode for protection of the circuit against a reverse-connection of power supply.

■Open collector

A collector of a transistor is configured to generate output. When the transistor turns on at set pressure, current flows from a collector to an emitter.

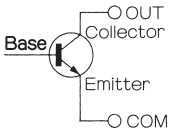

Transistor